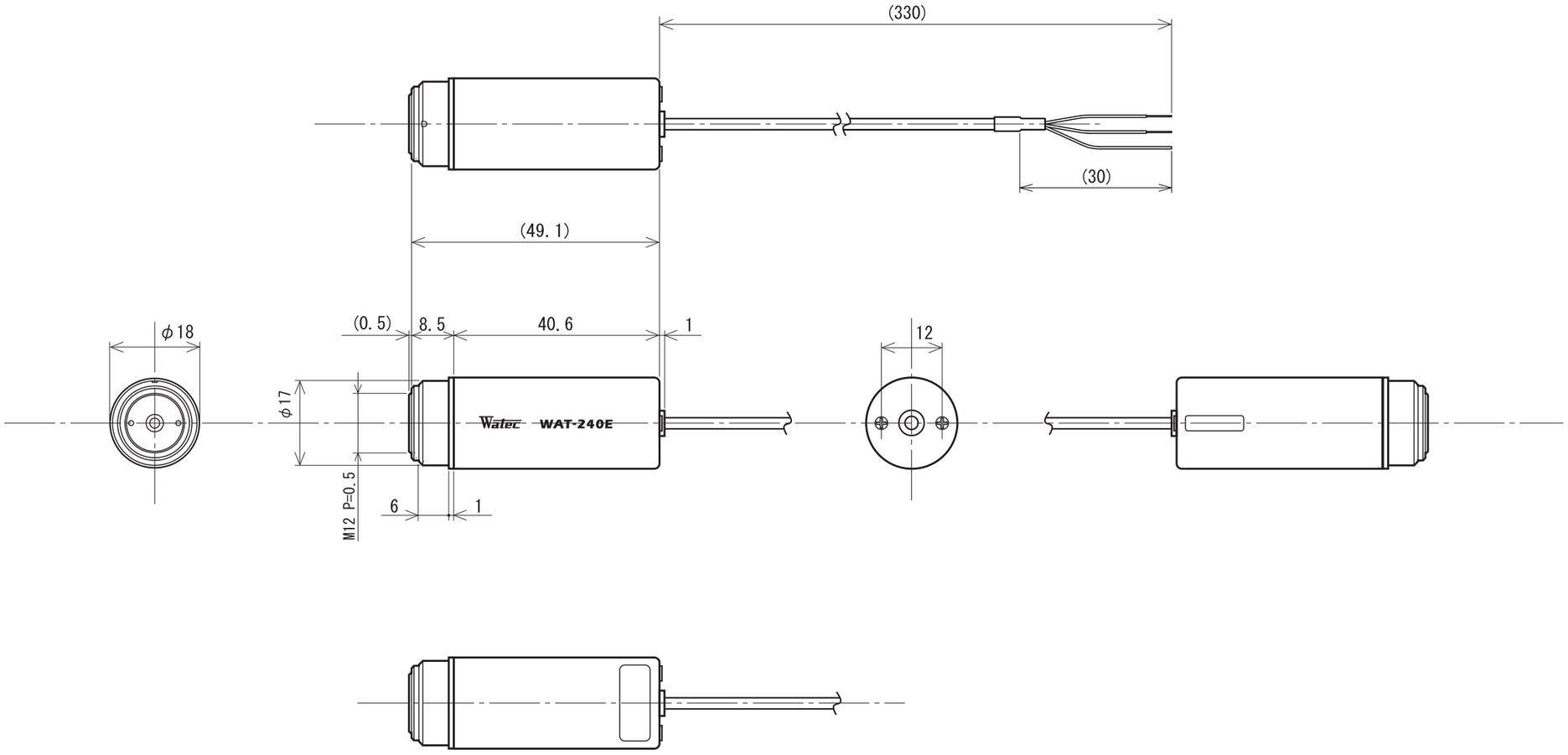WAT-240E(P3.7)