SPACECOM CCTV LENSES

HZ20700RDC IR-MP

[SPECIFICATIONS]

Image Size: 1/2

Focal Length :	20- 700mm
Maximum Relative Aperture :	1:3.2
Iris :	F3.2 - Approx. 360 (Tele F9)
Zoom Ratio :	35X
Angular Field of View :	17.8 X 13.4 deg. at 20mm 0.5 X 0.4 deg. at 700mm
Image Fomat :	6.4 X 4.8mm (D8mm)
Minimum Object Distance :	4m (From Front Vertex)
Object Dimensions at M.O.D. :	125.4 X 93.8cm at 20mm 3.8 X 2.8cm at 700mm
Optical Back Focal Distance :	14.93mm (In Air)

Flange Back :		17.526mm
Operation :	Zoom :	Motorized (DC+/-6.4V , Max40mA)
	Focus :	Motorized (DC+/-6.4V , Max40mA)
	Iris :	IG(Auto Close System) Close to Open : Less than 4.0V Open to Close : More than 0.1V
Operation Temperature :		-10 to +50℃
Mount :		C-Mount (Adjustable Lens Position)
Front Thread :		95mm P1
Size, Weight :		120 X 120.5 X 298.7mm, Approx. 3.5kg

[COMPOSITION]

Lens 1
Lens Cap 1
Dust Cap 1

4-Conductor Connector(Female) 1
(Any 4-conductor cable of external dia 6mm to be prepared separately.)

[DIMENSIONS]

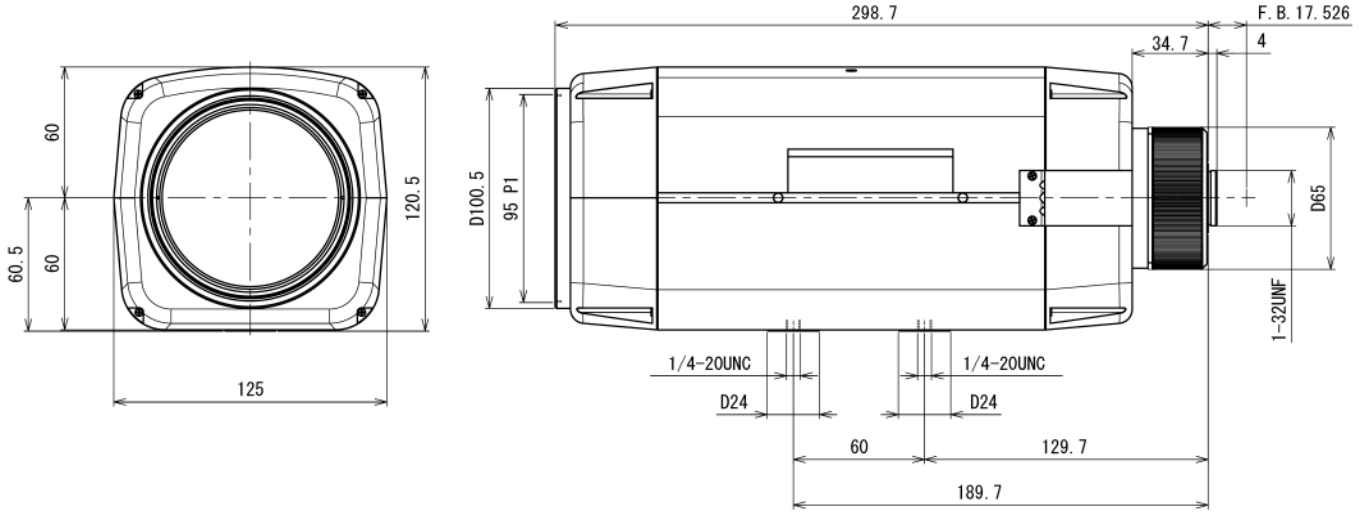

Unit : mm

[CIRCUIT DIAGRAM]

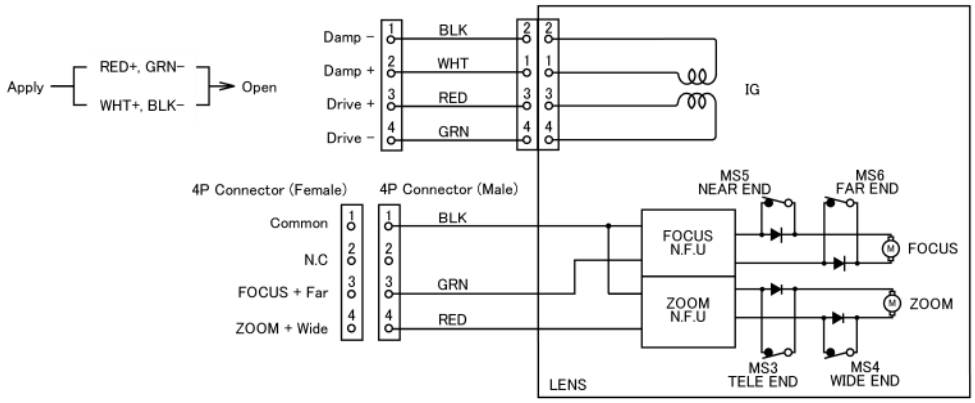

SUBJECT TO CHANGE WITHOUT NOTICE.